PUBLISHED: 21-NOV-2016
2017.0 DISCOVERY (LR), 307-01

AUTOMATIC TRANSMISSION/TRANSAXLE - VEHICLES WITH: 8HP45 8-SPEED AUTOMATIC TRANSMISSION AWD

TRANSMISSION FLUID PAN, GASKET AND FILTER (G1947967)

REMOVAL AND INSTALLATION

44.24.05	GASKET-OIL/FLUID PAN - RENEW	3000 CC, AJ V6 (AJ126)	1.5	USED WITHINS	

PART(S)

STEP	PART NAME	QUANTITY
Installation Step 1	Transmission fluid pan, gasket and filter bolts	1

REMOVAL

NOTE:

Removal steps in this procedure may contain installation details.

1. Disconnect the battery ground cable.
   Refer to: Specifications (414-00, Specifications).

transmissionmanuals.com

2.

WARNING:

Make sure to support the vehicle with axle stands.

Raise and support the vehicle.

3. Drain the transmission.
Refer to: Transmission Fluid Drain and Refill - V6 S/C 3.0L Petrol (307-01, General Procedures).

4.

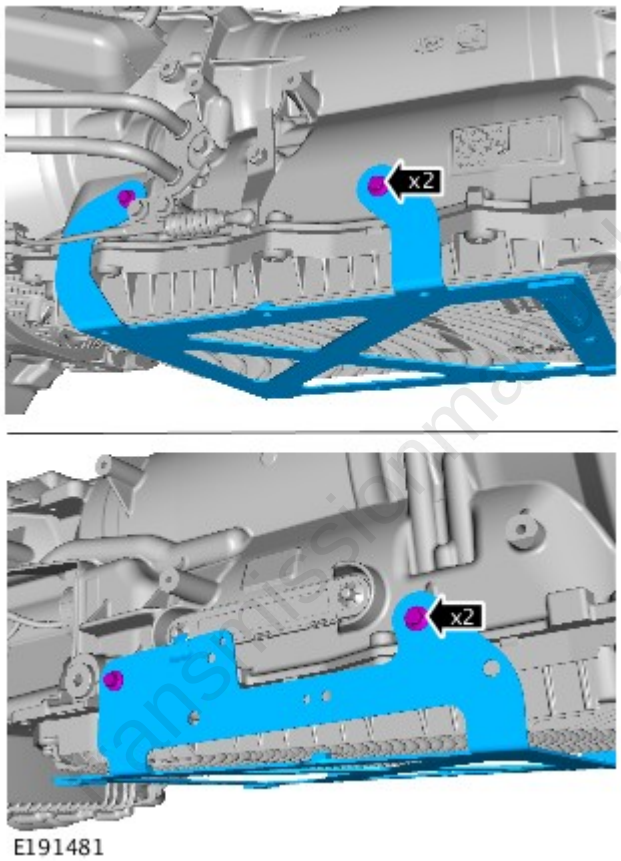

E191481

5.

CAUTION:

Be prepared to collect escaping fluids.

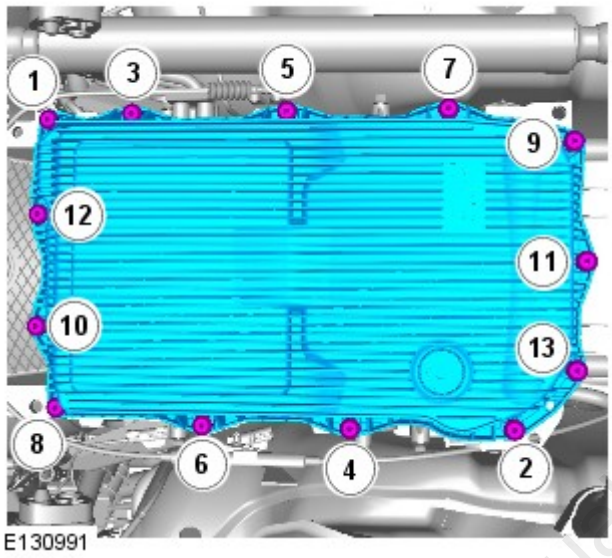

Remove the bolts in the sequence shown.

INSTALLATION

transmissionmanuals.com

1.

CAUTION:

Make sure that the area around the component is clean and free of foreign material.

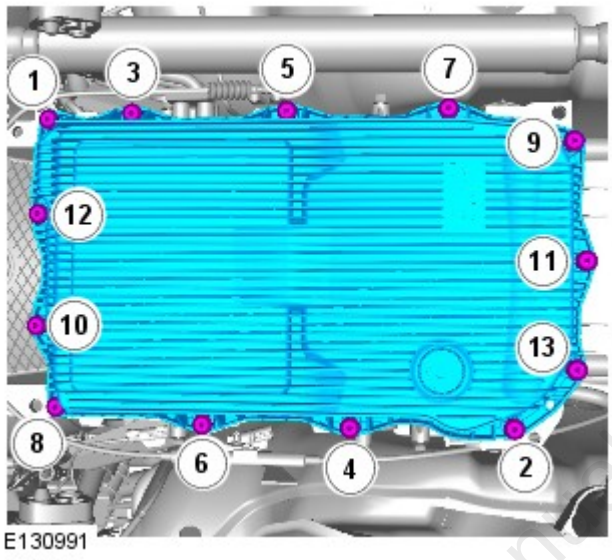

Install the bolts in the sequence shown.

Renew Part: *Transmission fluid pan, gasket and filter bolts* *Quantity:* *1* .

Torque: **4 Nm**

transmissionmanuals.com

2.

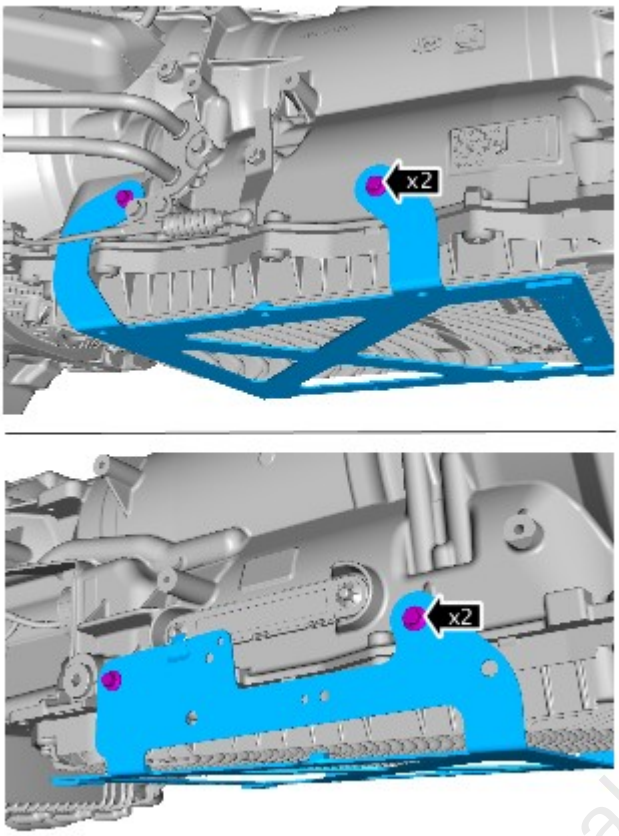

Torque: **9 Nm**

3. Refill the transmission.
Refer to: Transmission Fluid Drain and Refill - V6 S/C 3.0L Petrol (307-01, General Procedures).

4. Connect the battery ground cable.
Refer to: Specifications (414-00, Specifications).

transmissionmanuals.com